May.1.2020 Copyright 2020 HIROSE ELECTRIC CO., LTD. All Rights Reserved.
In case of consideration for using Automotive equipment / device which demand high reliability, kindly contact our sales window correspondents.

	COUNT	DESCRIPTION OF REVISIONS	BY	CHKD	DATE		COUNT	DESCRIPTION OF REVISIONS	BY	CHKD	DATE
△					. .	△					. .
△					. .	△					. .
△					. .	△					. .

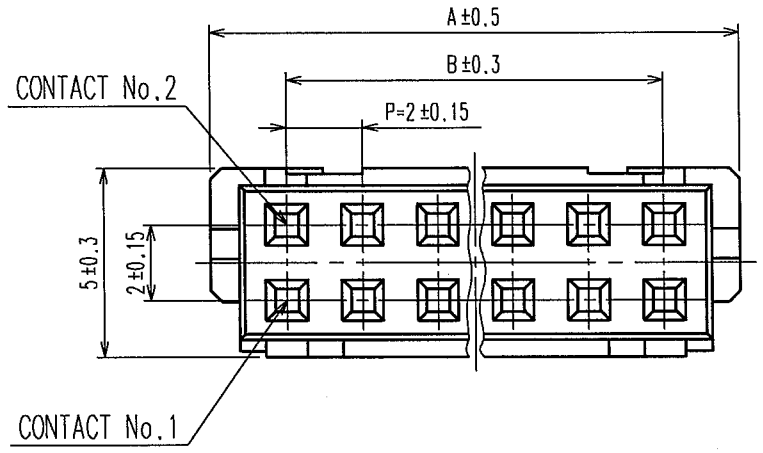

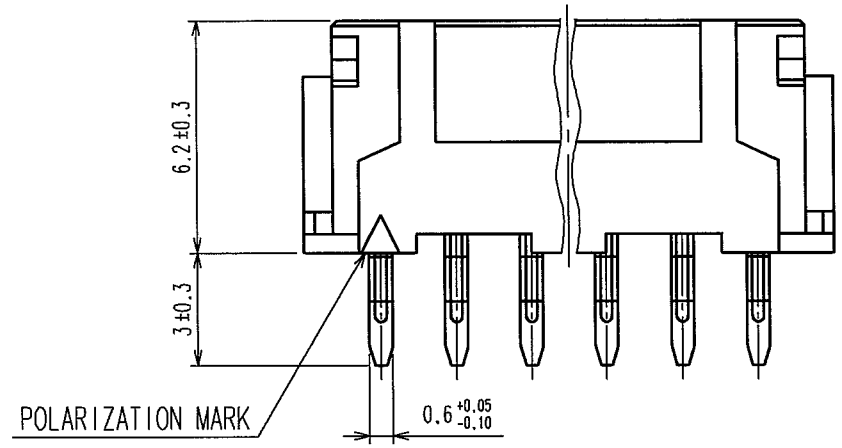

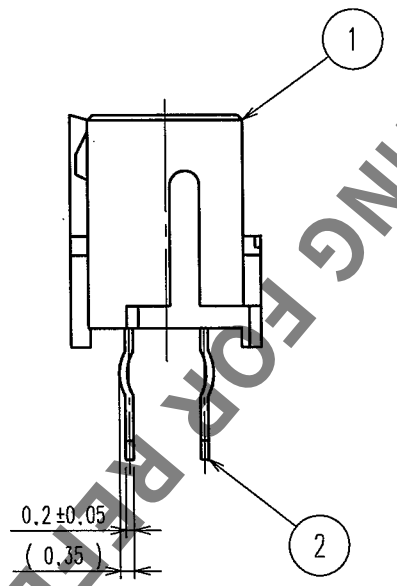

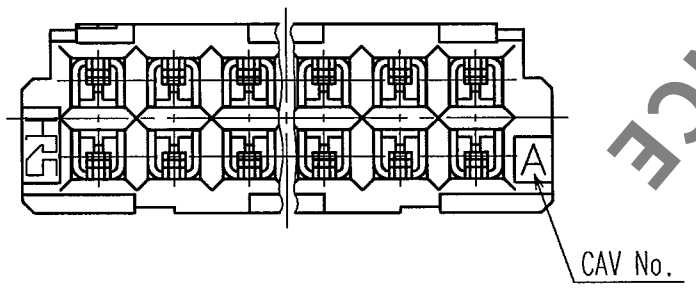

CODE No.	PART No.	NUMBER OF CONTACT	A	B
543-0553-9-05	DF11- 6DS-2DSA(05)	6	8.0	4.0
543-0554-1-05	DF11- 8DS-2DSA(05)	8	10.0	6.0
543-0555-4-05	DF11-10DS-2DSA(05)	10	12.0	8.0
543-0556-7-05	DF11-12DS-2DSA(05)	12	14.0	10.0
543-0557-0-05	DF11-14DS-2DSA(05)	14	16.0	12.0
543-0558-2-05	DF11-16DS-2DSA(05)	16	18.0	14.0
543-0559-5-05	DF11-18DS-2DSA(05)	18	20.0	16.0
543-0560-4-05	DF11-20DS-2DSA(05)	20	22.0	18.0
543-0561-7-05	DF11-22DS-2DSA(05)	22	24.0	20.0
543-0562-0-05	DF11-24DS-2DSA(05)	24	26.0	22.0
543-0563-2-05	DF11-26DS-2DSA(05)	26	28.0	24.0
543-0564-5-05	DF11-28DS-2DSA(05)	28	30.0	26.0
543-0565-8-05	DF11-30DS-2DSA(05)	30	32.0	28.0
543-0566-0-05	DF11-32DS-2DSA(05)	32	34.0	30.0

HRS DRAWING FOR REFERENCE

NOTES 1:RECOMMENDED PC BOARD HOLE DIAMETER $\phi 0.8^{+0.1}_{-0}$
2:THE DIMENSION OF PROSITY OF KINK $\phi 0.8^{+0.05}_{-0}$

NO.	MATERIAL	FINISH, REMARKS	NO.	MATERIAL	FINISH, REMARKS
1	POLYAMIDE	UL94V-0,BLACK	2	BRASS	TIN PLATED 2μm min

CODE NO.(OLD)	DRAWN	DESIGNED	CHECKED	APPROVED	RELEASED
	F.Matsuki '04.03.30	H.Umehara '04.03.30	T.Miyazaki '04.03.31	T.Ono 04.03.31	

SCALE 5 : 1	DRAWING NO. EDC3-162401-01	PART NO. DF11-*DS-2DSA(05)
UNITS mm	HRS HIROSE ELECTRIC CO., LTD	CODE NO. CL543- 1/1

TO