THIS DRAWING IS UNPUBLISHED. RELEASED FOR PUBLICATION 2020
© COPYRIGHT 2020 BY TE CONNECTIVITY ALL RIGHTS RESERVED.

LOC	DIST

REVISIONS

P	LTR	DESCRIPTION	DATE	DWN	APVD
	C	REVISED PER ECO-15-007761	28MAY2015	RL	DM
	D	REVISED PER PCN E-20-008101	12JUN2020	DM	DM
	E	REVISED PER PCN-21-121539	04MAR2022	MK	DM

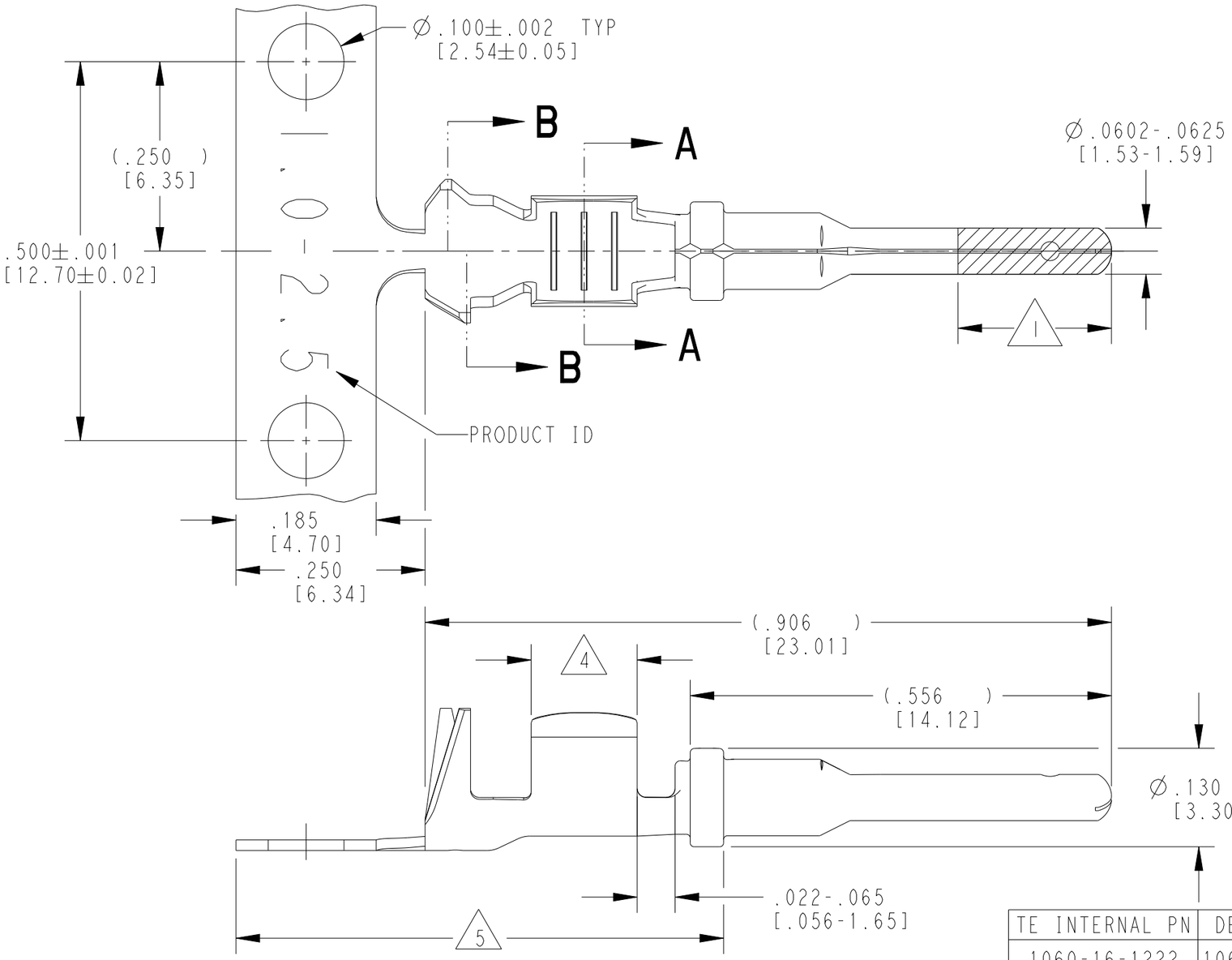

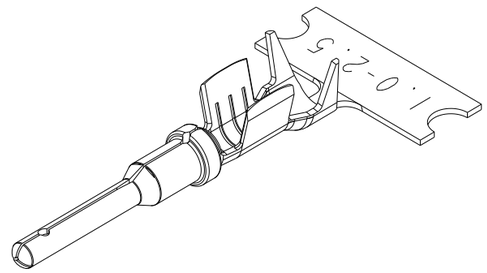

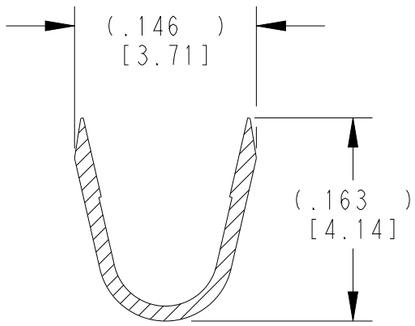

SECTION A-A
WIRE BARREL

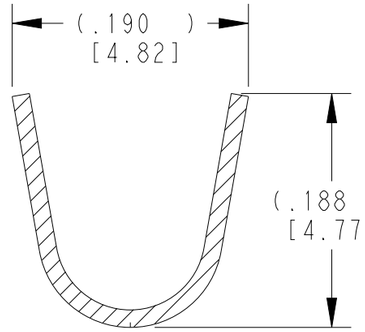

SECTION B-B
INSULATION BARREL

	TE INTERNAL PN	DEUTSCH PN	PLATING
	1060-16-1222	1060-16-1222	Ni/Cu overall, Sn/Ni/Cu Wire Barrel
1	1060-16-1244	1060-16-1244	Selective Au, Ni/Cu overall, Sn/Ni/Cu Wire Barrel
	1060-16-1277	1060-16-1277	Sn/Ni/Cu overall

5 TIN PLATING MAY BE IN THIS REGION.

4 TIN PLATED REGION.

3 MATERIAL: .014 [0.36] THICK CU ALLOY

2. WIRE RANGE: 16 AWG TO 12 AWG [1.0-2.5 mm²]
INSULATION RANGE: Ø.075-.140 [Ø1.91-3.56]

1 GOLD PLATED REGION.

NOTES: UNLESS OTHERWISE SPECIFIED

THIS DRAWING IS A CONTROLLED DOCUMENT.

DIMENSIONS: INCHES[mm]

TOLERANCES UNLESS OTHERWISE SPECIFIED:
0 PLC ±
1 PLC ±
2 PLC ±
3 PLC ±.025 [0.64]
4 PLC ±
ANGLES ±

MATERIAL 3

FINISH SEE TABLE

DWN VLADIMIR TOMSA 29MAR2001
CHK BRICE BYFORD 14MAR2002
APVD R. REED 14MAR2002
PRODUCT SPEC 108-151000
APPLICATION SPEC 114-151001
WEIGHT 0.40 g

TE Connectivity

NAME STAMPED CONTACT PIN SIZE 16

SIZE	CAGE CODE	DRAWING NO	RESTRICTED TO
A3	4AFU8	C-1060-16-12XX	-

Customer Drawing | SCALE 6:1 | SHEET 1 OF 1 | REV E

1470-19 (3/11)