| DRAWING NUMBER / NUMERO DISEGNO | FSC 309263 | REVISION / REVISIONE | E | SHEET / FOGLIO | 1/1 | APPROVAL LEVEL / LIV. DI APPROVAZIONE | - |
|---|---|---|---|---|---|---|---|
| DRAWING / DISEGNO | C | | | | | | |

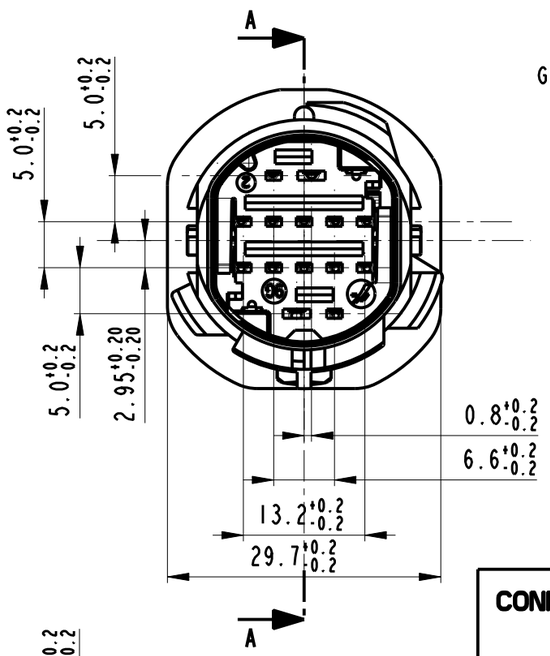


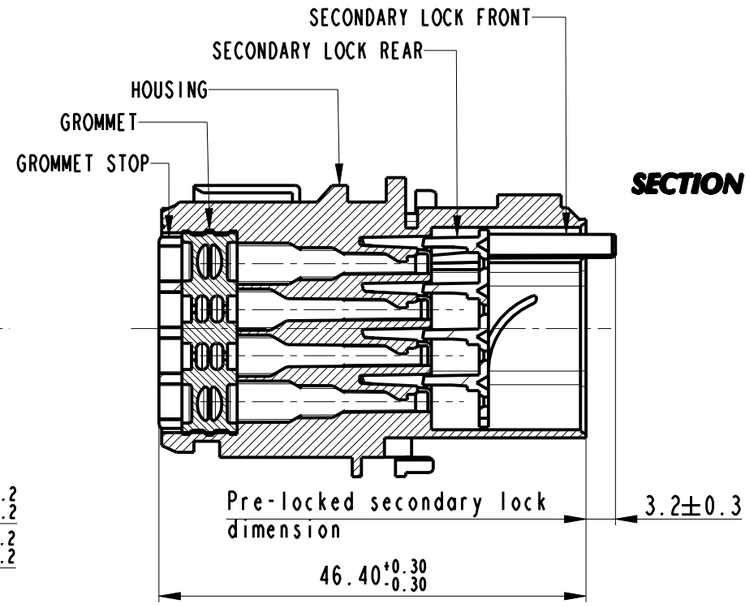


**SECTION A-A**

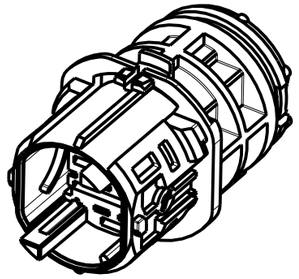

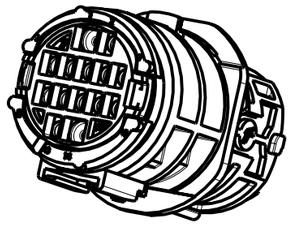

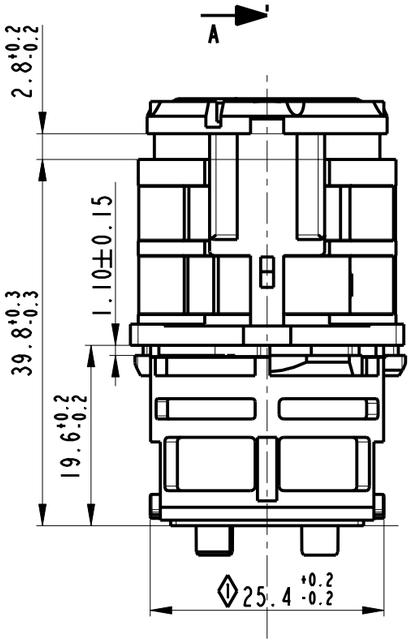


**CONNECTION FIXING BRACKET**

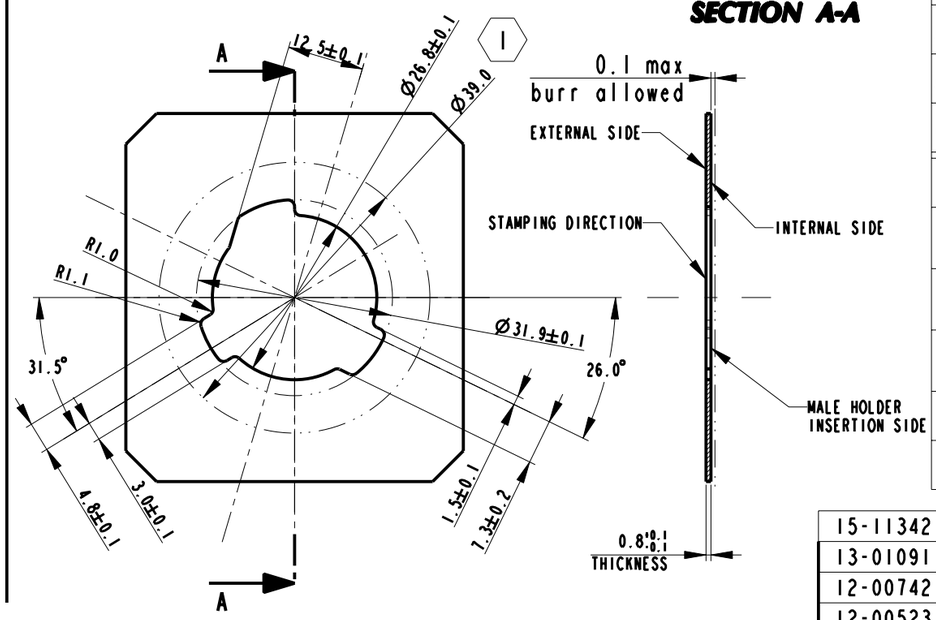


**SECTION A-A**

| ASSEMBLY MALE HOLDER | | | |
|---|---|---|---|
| LAY OUT | 6 WAY | 14 WAY | |
| MVL P/N | F160410 | DTBMHPE14BKSV | |
| REV. | A | A | |
| DELPHI P/N | 33504494 | 13798672 | |
| REV. | 01 | 01 | |
| CLOSED CAVITIES | 1, 2, 3, 10, 11, 12, 13, 14 | -- | |
| HOUSING | GREEN | GREEN | PA66 GF15 |
| SECONDARY LOCK FRONT | WHITE | WHITE | PBT GF10 |
| SECONDARY LOCK REAR | WHITE | WHITE | PBT GF10 |
| GROMMET STOP | RED | BLUE | PBT NATURAL |
| GROMMET | YELLOW | RED | SILICON RUBBER |
| COMPONENT | COLOUR | | MATERIAL |

**14 WAYS**

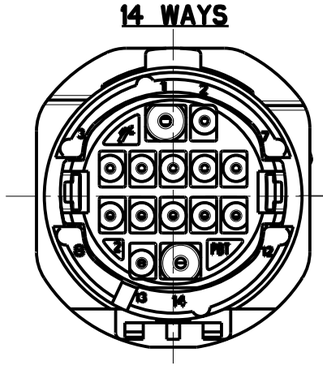


**6 WAYS**

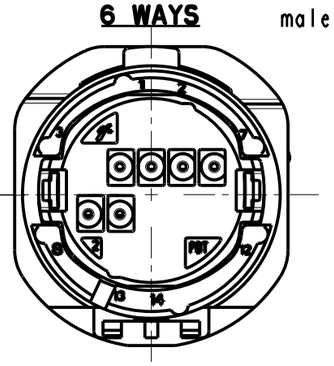


- This connector is designed for the following male contacts :

| MVL P/N | DELPHI P/N |
|---|---|
| 211 CL 2S 1120 | 10738196 |
| 211 CL 2S 2120 | 10738197 |
| 211 CL 2S 1160 | 10730997 |
| 211 CL 2S 2160 | 15368852 |
| 17062100 | 33504010 |
| 17062110 | 33102119 |

1 CAPABILITY

1 Clearance area for Esternal Gasket position

| ECN-NO. / NUMERO -ECN | DATE DD/ MM / YY / DATA | REVISION / REVISIONE | POSITION / POSIZIONE | CHANGE DESCRIPTION / DESCRIZIONE MODIFICA | DRAWN BY / DISEGNATORE | CHK. BY / CONTROLLATO | APPR. BY / APPROVATO |
|---|---|---|---|---|---|---|---|
| 15-11342 | 30-01-2015 | E | - | DELPHI P/N ADDED | F.G | - | M.C |
| 13-01091 | 08-10-2013 | D | - | Updated dimension | F.G. | - | M.C. |
| 12-00742 | 18/05/12 | C | - | Removed terminal PN 17062120 | G.B. | D.T. | M.C. |
| 12-00523 | 16/04/12 | B | - | Added p/n F160410; updated p/n table | D.T. | - | M.C. |
| 12-00315 | 07-03-2012 | A | - | Changed Contacts P/Ns and Updated Frame | F.G | - | M.C |

PRODUCT SPEC. / SPEC. DI PRODOTTO: IPS170
PACKAGING SPEC. / SPEC. DI IMBALLAGGIO: -
APPLICATION SPEC. / SPEC. DI APPLICAZIONE: IPS274

COPYRIGHT DELPHI CORPORATION AND/OR ITS AFFILIATES. ALL RIGHTS RESERVED. REVISED
THIS DRAWING IS THE PROPERTY OF DELPHI CORPORATION. THE REPRODUCTION, DISTRIBUTION AND UTILIZATION OF THIS DOCUMENT OR ITS RELATED CAD MATH DATA, AS WELL AS COMMUNICATION OF ANY CONTENT TO OTHERS, WITHOUT EXPRESS AUTHORIZATION IS PROHIBITED.
QUESTO DISEGNO E' PROPRIETA' DI DELPHI CORPORATION E CONTIENE INFORMAZIONI CONFIDENZIALI. LA RIPRODUZIONE, DISTRIBUZIONE E UTILIZZAZIONE DI QUESTO DOCUMENTO O DELLE SUE RELATIVE MATEMATICHE CAD, NONCHE LA COMUNICAZIONE DI QUALSIASI CONTENUTO AD ALTRI, SENZA ESPLICITA AUTORIZZAZIONE, E PROIBITA

TOLERANCES / TOLLERANZE: ± 0.3mm. / ±1°
COUNTERPART Nr. / CONTROPARTE Nr.:
MATERIAL : / MATERIALE : SEE TABLE
COLOUR : / COLORE : SEE TABLE
SURFACE FINISH / FINITURA SUPERFICIALE: -
DO NOT SCALE DRAWING / DISEGNO FUORI SCALA
TOOL NO.: -
LOC. CODE / NAZIONALITA': IT

DELPHI
DELPHI PACKARD ELECTRICAL/ELECTRONIC ARCHITECTURE
TORINO, ITALY

CAD SYSTEM: pro / eng.
ISO PROJECTION / PROIEZIONE ISO
DIMENSION IN MILLIMETERS / DIMENSIONI IN MILLIMETRI
DWG SIZE / FORMATO: A3

| | DATE / DATA | NAME / NOME |
|---|---|---|
| DRAWN BY / DISEGNATORE | 16-04-04 | F. Girard |
| CHECKED BY / CONTROLLATO | - | - |
| APPROVED BY / APPROVATO | 16-04-04 | N. Colombo |

TITLE / DESCRIZIONE: DOOR TO BODY 14 WAYS ASSY MALE HOLDER SEALED VERSION
DRAWING NUMBER / NUMERO DISEGNO: FSC 309263
SHEET / FOGLIO: 1 of / di 1
ESR NO. / NUMERO ESR: EU -
CAT. NO. / NUMERO CAT.: SEE TABLE
FILE NAME / NOME FILE: FSC309263_PM
SCALE / SCALA: 1:1